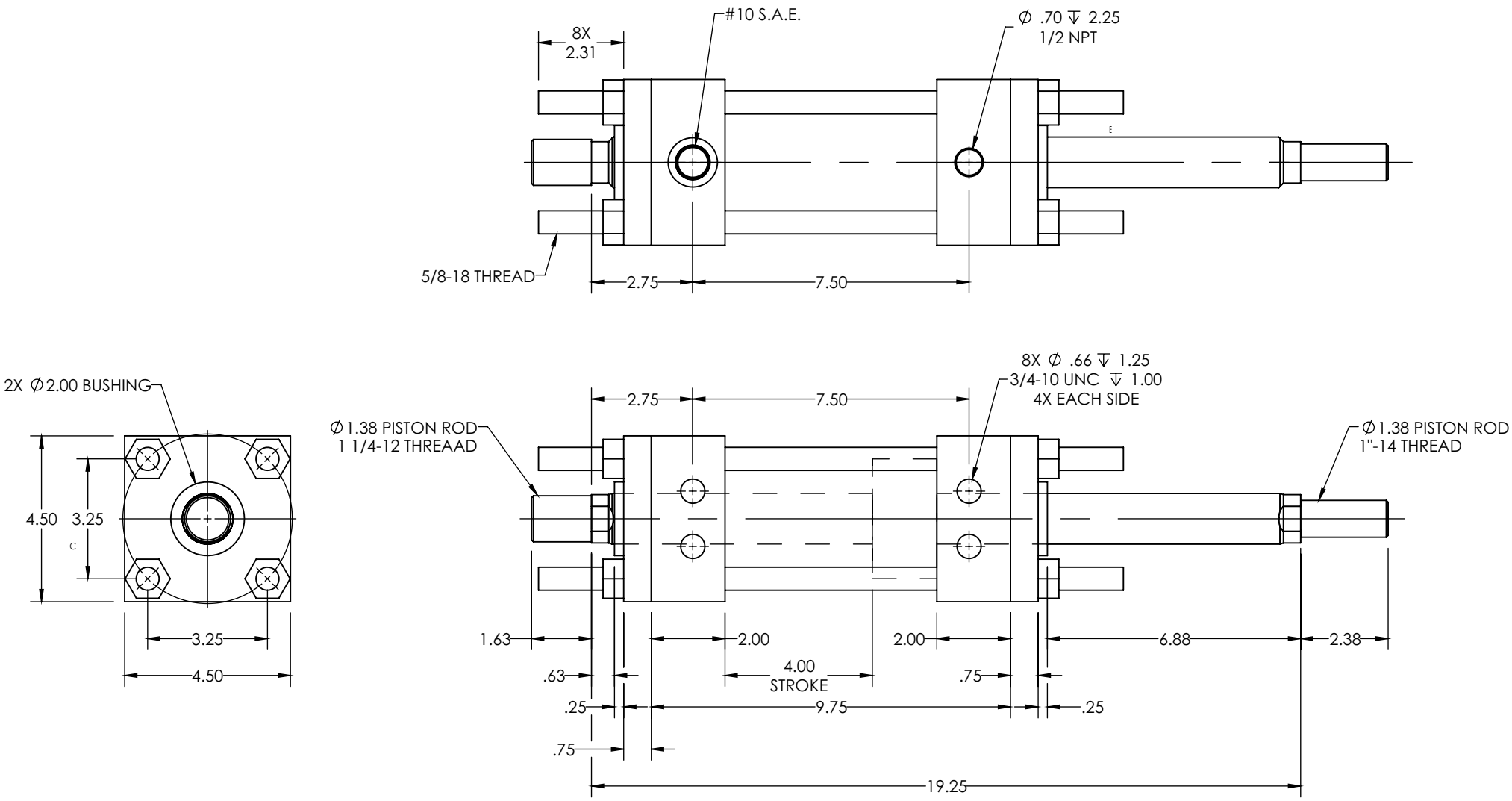
8X
2.31
#10 S.A.E.
Ø .70 ↧ 2.25
1/2 NPT
5/8-18 THREAD
2.75
7.50
2X Ø2.00 BUSHING
4.50
3.25
3.25
4.50
Ø1.38 PISTON ROD
1 1/4-12 THREAAD
8X Ø .66 ↧ 1.25
3/4-10 UNC ↧ 1.00
4X EACH SIDE
Ø1.38 PISTON ROD
1"-14 THREAD
1.63
2.00
2.00
6.88
2.38
.63
4.00
STROKE
.75
.25
9.75
.25
.75
19.25